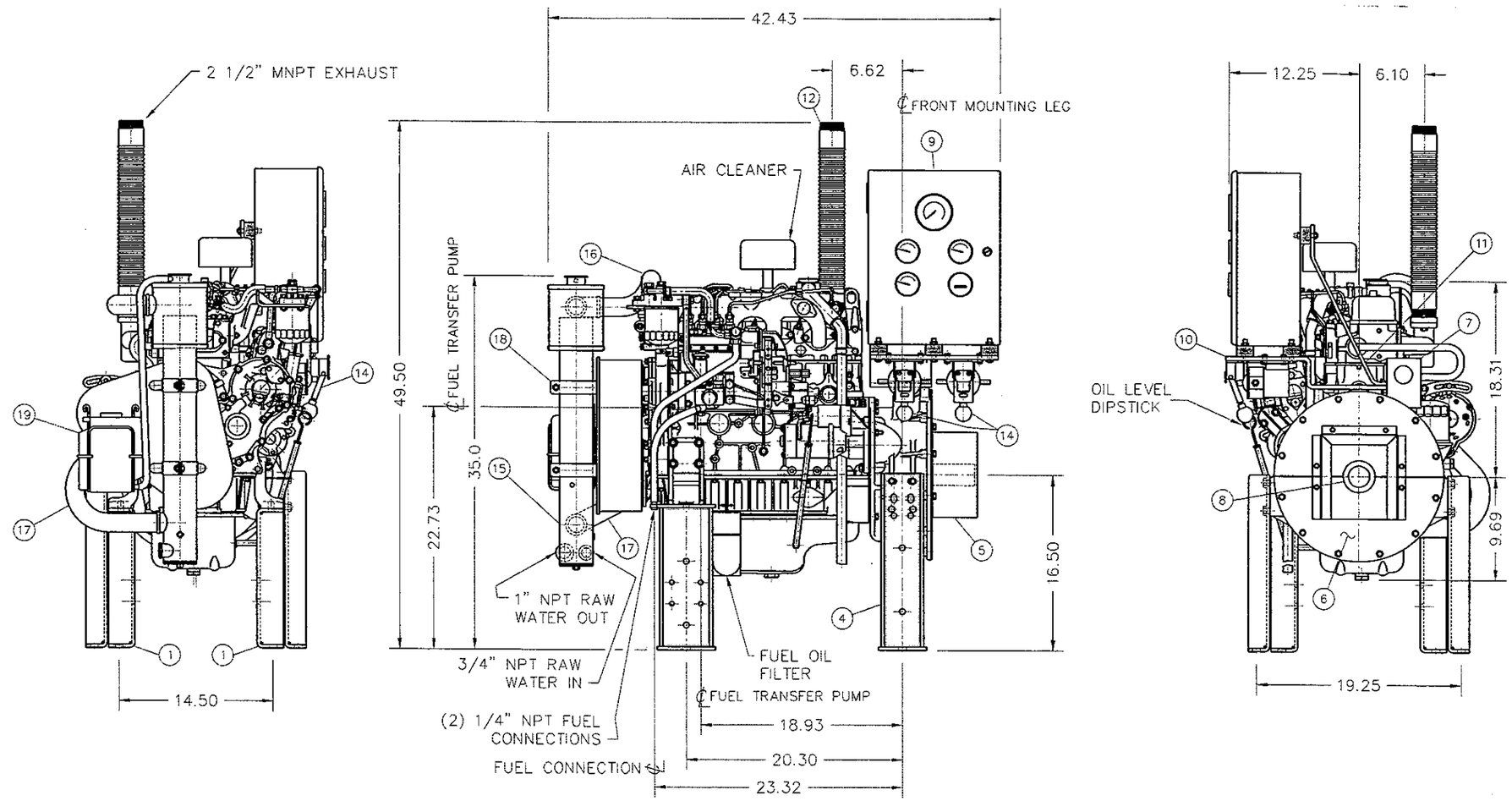

ITEM	PART NUMBER	DWG NUMBER	DESCRIPTION	QTY	UNIT
19	–	–	COOLANT RECOVERY BOTTLE	1	EACH
18	–	–	HEAT EXCH. BRACKET	2	EACH
17	–	–	LOWER HEAT EXCHANGER HOSE	1	EACH
16	–	–	UPPER HEAT EXCHANGER HOSE	1	EACH
15	–	–	HEAT EXCHANGER	1	EACH
14	–	–	METRON SWITCH	2	EACH
13	–	–	–	–	EACH
12	–	C-1207	EXHAUST FLEXIBLE EXTENSION	1	EACH
11	–	D-1238	REAR SUPPORT BRACE	1	EACH
10	–	C-1201	INSTRUMENT PANEL SUPPORT	1	EACH
9	–	C-1213	ENGINE INSTRUMENT PANEL	1	EACH
8	–	–	STUB SHAFT DRIVE PLATE*	1	EACH
7	–	–	ENGINE HEATER (1000W, 120V)	1	EACH
6	–	C-1214	FLYWHEEL COVER*	1	EACH
5	–	C-1211	SHAFT GUARD*	1	EACH
4	–	D-1226	REAR MOUNTING LEGS	2	EACH
3	–	–	–	–	EACH
2	–	–	–	–	EACH
1	–	D-1235	FRONT MOUNTING LEGS	2	EACH

NOTES:

1) ALL DIMENSIONS ARE ±1/8", U.O.S.
2) ALL ITEMS MARKED * ARE OPTIONAL.

FOR QUOTE ONLY
NOT FOR CONSTRUCTION

THIS DRAWING IS THE PROPERTY OF EDWARDS MANUFACTURING AND THE INFORMATION CONTAINED HEREIN IS CONFIDENTIAL. THIS DRAWING AND ALL COPIES MUST BE RETURNED TO EDWARDS MANUFACTURING IMMEDIATELY UPON REQUEST.

REV.	DATE	REVISION DESCRIPTION	ECN NO.	BY

Edwards EMI Manufacturing Inc.
2441 SE STUBB STREET
MILWAUKIE, OREGON 97222
PHONE: 503-659-4198

TITLE: DIESEL ENGINE, OEM, EMI4JB1H, HEAT EXCHANGER COOLED

MATERIAL:

FINISH:

TOLERANCES U.O.S.:
FRAC.=±1/16 ANGLE=±1° X.X=±.030 X.XX=±.015 X.XXX=±.005

DATE DRAWN:	DRAWN BY:	CHECKED BY:	APPROVED BY:	SCALE:
10-10-00	DHB			1/8

SALES ORDER NUMBER:	DRAWING NUMBER:	REVISION:
	C-1203	–