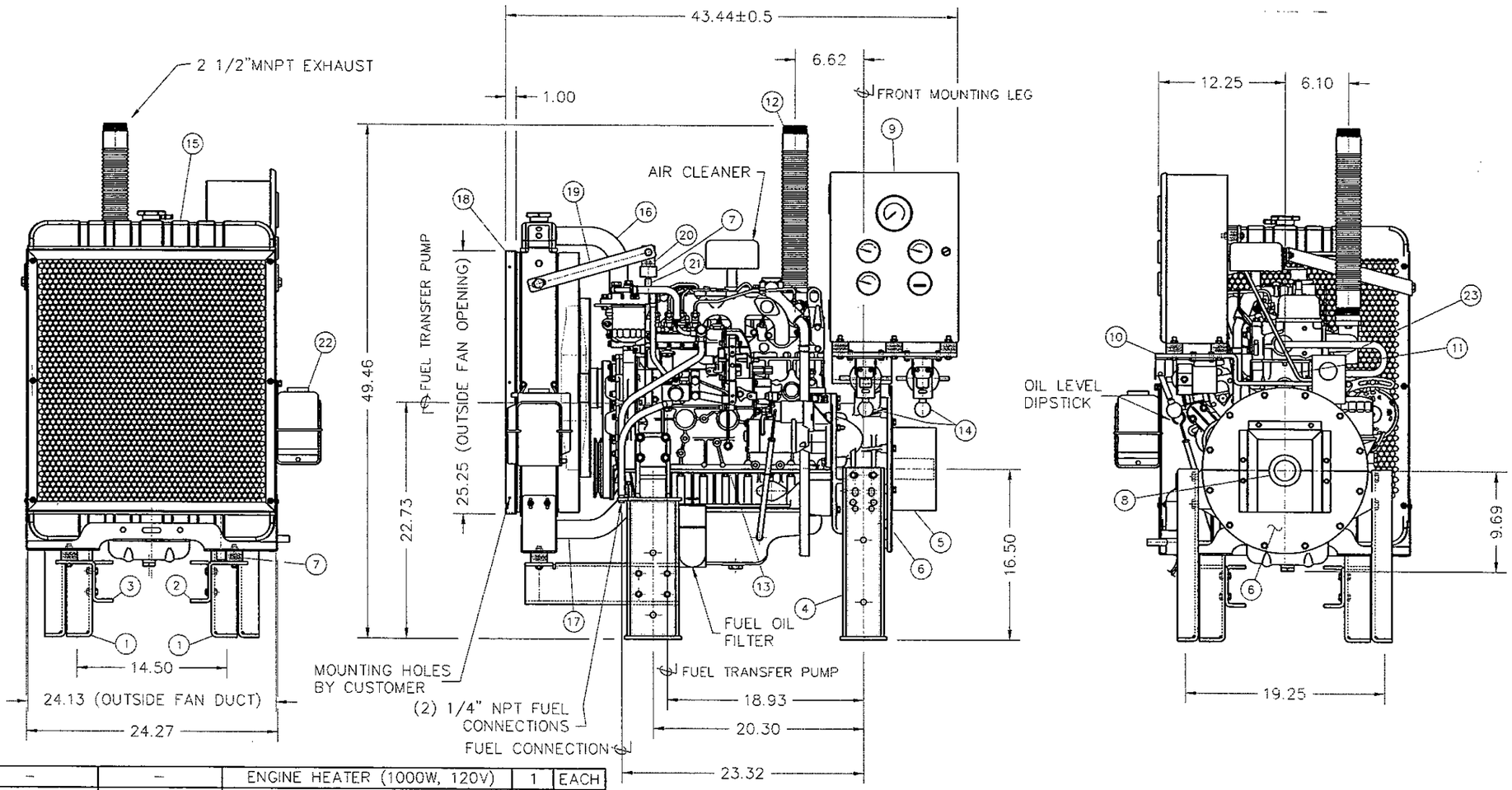

ITEM	PART NUMBER	DWG NUMBER	DESCRIPTION	QTY	UNIT
23	–	–	ENGINE HEATER (1000W, 120V)	1	EACH
22	9-1163	–	COOLANT RECOVERY BOTTLE	1	EACH
21	–	B-1240	METRIC TO UNC ADAPTER	1	EACH
20	–	C-1206	RADIATOR STRAP CONNECTION CLIP	1	EACH
19	–	C-1205	UPPER RADIATOR STRAP	2	EACH
18	–	C-1234	RADIATOR AIR DUCT FLANGE*	1	EACH
17	–	–	LOWER RADIATOR HOSE	1	EACH
16	–	–	UPPER RADIATOR HOSE	1	EACH
15	–	D-1254	RADIATOR	1	EACH
14	–	–	METRON SWITCH	2	EACH
13	–	–	–	–	EACH
12	–	C-1207	EXHAUST FLEXIBLE EXTENSION	1	EACH
11	–	D-1238	REAR SUPPORT BRACE	1	EACH
10	–	C-1201	INSTRUMENT PANEL SUPPORT	1	EACH
9	–	C-1213	ENGINE INSTRUMENT PANEL	1	EACH
8	–	–	STUB SHAFT DRIVE PLATE*	1	EACH
7	–	–	VIBRATION ISOLATORS	6	EACH
6	–	C-1214	FLYWHEEL COVER*	1	EACH
5	–	C-1211	SHAFT GUARD*	1	EACH
4	–	D-1226	REAR MOUNTING LEGS	2	EACH
3	–	D-1232	LEFT HAND RADIATOR SUPPORT	1	EACH
2	–	D-1230	RIGHT HAND RADIATOR SUPPORT	1	EACH
1	–	D-1235	FRONT MOUNTING LEGS	2	EACH

NOTES:

1) ALL DIMENSIONS ARE ±1/8", U.O.S.
2) ALL ITEMS MARKED * ARE OPTIONAL.

FOR QUOTE ONLY
NOT FOR CONSTRUCTION

REV.	DATE	REVISION DESCRIPTION	ECN NO.	BY

Edwards EMI Manufacturing Inc.
2441 SE STUBB STREET
MILWAUKIE, OREGON 97222
PHONE: 503-659-4198

TITLE: DIESEL ENGINE, OEM, EMI4JB1R, RADIATOR COOLED

MATERIAL:

FINISH:

TOLERANCES U.O.S.:
FRAC.=±1/16 ANGLE=±1° X.X=±.030 X.XX=±.015 X.XXX=±.005

DATE DRAWN:	DRAWN BY:	CHECKED BY:	APPROVED BY:	SCALE:
10-10-00	DHB			1/8

SALES ORDER NUMBER:	DRAWING NUMBER:	REVISION:
	C-1202	–

THIS DRAWING IS THE PROPERTY OF EDWARDS MANUFACTURING AND THE INFORMATION CONTAINED HEREIN IS CONFIDENTIAL. THIS DRAWING AND ALL COPIES MUST BE RETURNED TO EDWARDS MANUFACTURING IMMEDIATELY UPON REQUEST.